MD5050/MD5050 T

Track Drills

General Data		
Hole Diameter Range	63.5 mm-102 mm	2.5 in-4.0 in
Hole Depth Maximum	31 m	102.5 ft
Engine	Tier 3, 4 cylinder, turbocharged 150 kW (203 hp) @ 2,100 rpm	
Compressor	7 m^3/min	250 ft^3/min
Rock Drill HPR4519	19 kW	25 hp

MD5050/MD5050 T Features

Undercarriage
A strong drilling foundation is yours with exceptional undercarriage performance including low center of gravity and high ground clearance.

Pattern Coverage
With a heavy-duty 3.04 m (10 ft) boom and 0.61 m (2 ft) extension on the MD5050, more pattern coverage is achieved. The extremely maneuverable MD5050 T reaches even further with its 1.2 m (4 ft) extension and full 360° turntable rotation.

Carousel Rod Changer
Improve your productivity with the Cat® Carousel Rod Changer which substantially reduces overall rod change time.

Rock Drill
Cat Rock Drills are simple enough to be owner serviced yet renowned for their strength and long life in hard rock drilling with hydraulic powered percussion and rotation that covers a wide range of applications.

Serviceability and Customer Support
MD5050/MD5050 T systems are designed for easy maintenance so equipment life cycle is long and has high resale value. A wide range of Cat parts and service plans support your investment.

Contents

Model Comparison....4
Undercarriage....5
Pattern Coverage....6
Carousel Rod Changer....8
Boom and Feed....10
Power Group....11
Rock Drills....12
Cab....14
Dust Collection....16
Safety....17
Serviceability....18
Sustainability....20
Specifications....21
Standard Equipment....25
Optional Equipment....26

Ready to Achieve More

Productive, Reliable, Serviceable.

Efficient production is yours with the Cat MD5050/MD5050 T Track Drill. Fast cycle times and a low operating cost are achieved through our proven designs such as enhanced maneuverability, pattern coverage, fast set-ups and reliable rock drill.

Equipment life cycle is long thanks to our durable Cat components and maintenance friendly designs.

Model Comparison
What's Different

The basic differences between the two models are their undercarriages and pattern coverage capabilities. The MD5050 has a standard undercarriage and a 0.61 m (2 ft) boom extension for a large pattern coverage. Whereas the MD5050 T undercarriage has a unique 360° turntable and a 1.2 m (4 ft) boom extension for the largest pattern coverage possible. This is achieved with its ability to turn 360° for positioning the drill in tight spaces.

	MD5050	MD5050 T
Boom Extension	0.61 m (2 ft)	1.2 m (4 ft)
Boom Swing	14° L to 19° R	360°
Ground Clearance	380 mm (15 in)	434.5 mm (17 in)
Ground Pressure	0.82 bar (12 psi)	0.5 bar (7.5 psi)
Track Gauge	198 cm (78 in)	200 cm (90 in)
Grousers	300 mm (11.8 in)	500 mm (19.68 in)
Optional Knuckle Boom	—	5.9 m (19.25 ft)
Undercarriage	B-3 excavator	312 excavator with 360° turntable

Undercarriage

Your Foundation for Success

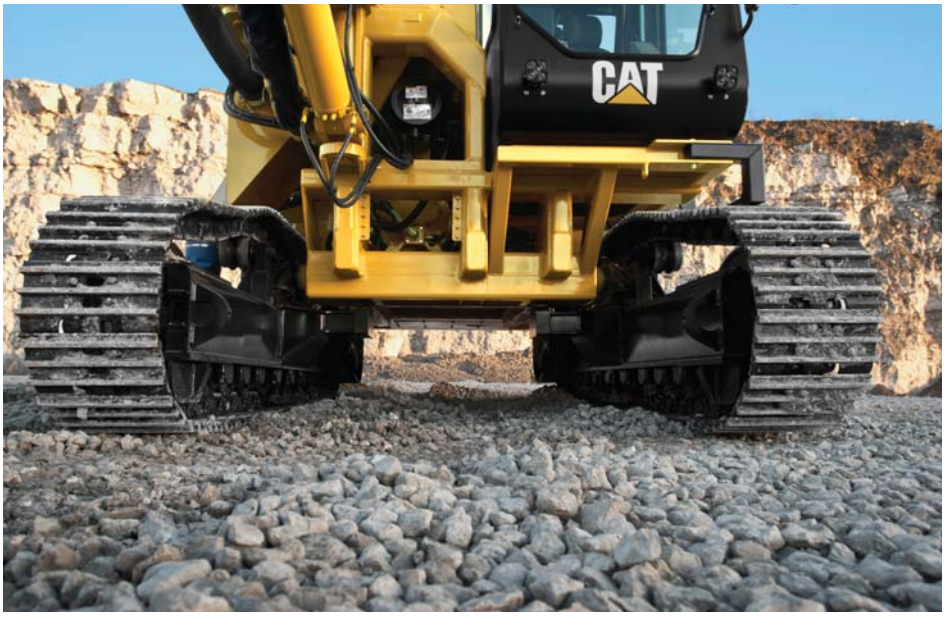

You can expect a long life due to the structural integrity of our robust undercarriage designs. Despite the unyielding demands of drilling and tramming rough terrain, our structures are continually proven reliable. Extreme maneuverability is yours thanks to the low center of gravity high ground clearance on MD5050 and MD5050 T.

Highly Maneuverable

- Hydraulic motor-driven track assemblies
- Dual tram maximum speed 4.0 km/h (2.5 mph)
- Gradeability 35°
- Hydraulically released spring applied brakes
- Excavator-type track rollers

Durable

- Robust strut design is resistant to failures
- Easy installation and removal of shoes
- Rebuildable

MD5050

- B-3 excavator
- Ground clearance 380 mm (15 in)
- Ground pressure 0.82 bar (12 psi)
- Track gauge 198 cm (78 in)
- Wide triple grousers 300 mm (11.8 in)
- Oscillation ±10°

MD5050 T

- Cat 312 excavator with 360° turntable
- Ground clearance 434.5 mm (17 in)
- Ground pressure 0.5 bar (7.5 psi)
- Track gauge 200 cm (90 in)
- Wide triple grousers 500 mm (19.68 in)

Cat Grease Lubricated Track (GLT)

- Each track joint is sealed to retain the grease between the pin and bushing
- Track noise is reduced because there is no metal to metal contact between the pin and bushing
- The grease lubricant prevents frozen or seized track joints

Pattern Coverage
Gaining Ground

MD5050

Large pattern coverage is achieved with the 3.04 m (10 ft) boom and 0.6 m (2 ft) extension on the MD5050.

- Telescopic boom 3.04 m (10 ft)
- MD5050 boom extension adds 0.6 m (2 ft)
- The boom swing capability of the MD5050 is 14° L to 19° R

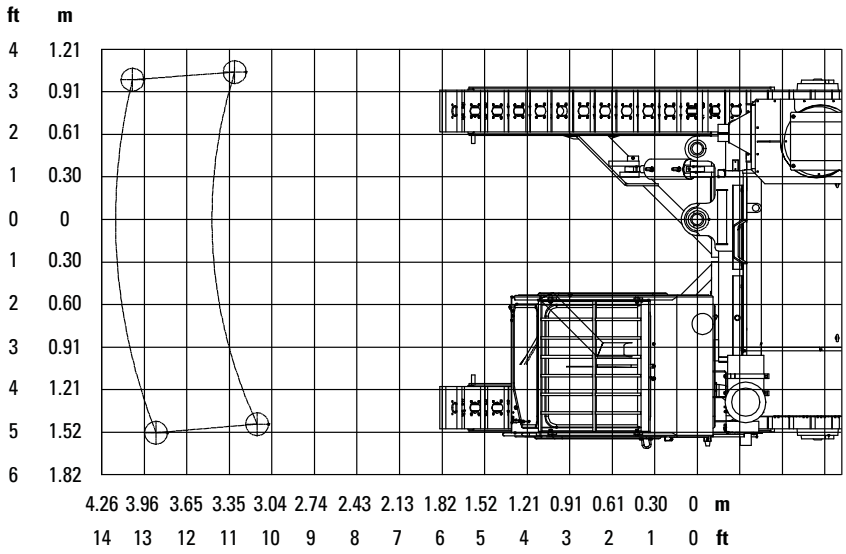

MD5050 T

Full 360° turntable with 3.04 m (10 ft) boom and 1.2 m (4 ft) extension achieves more.

- Telescopic boom 3.04 m (10 ft)
- Boom extension adds 1.2 m (4 ft)
- Rotates on 360° turntable

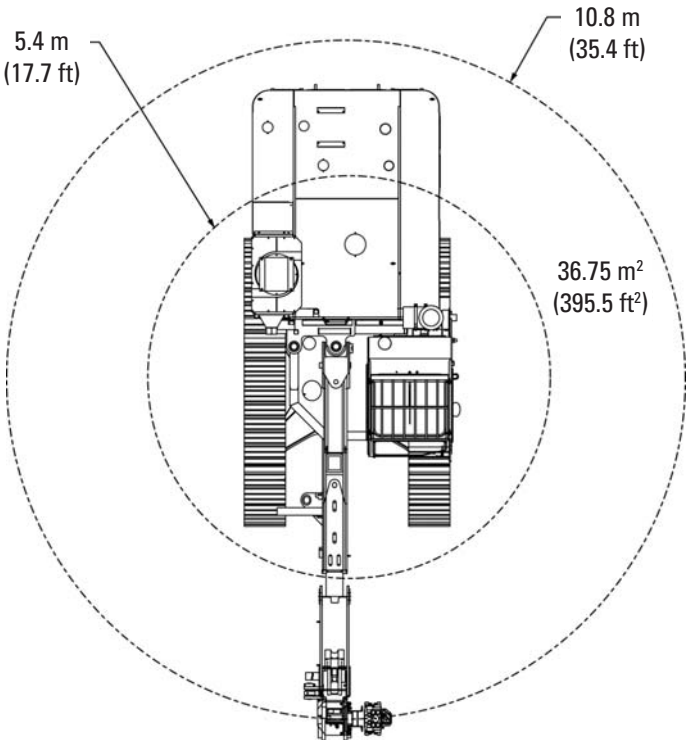

Increase safety and stability with the 360° turntable.

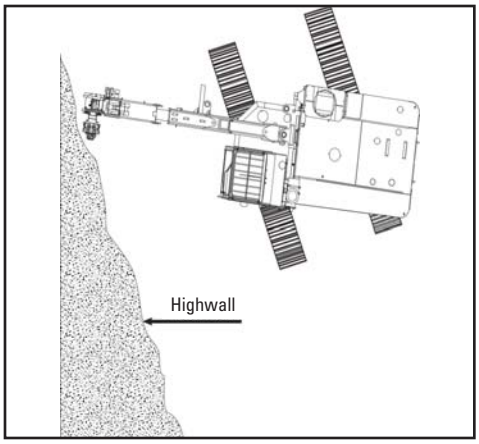

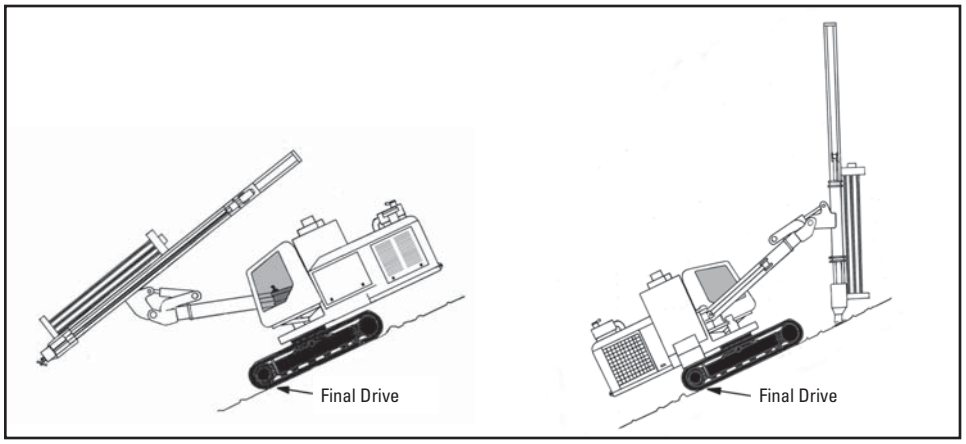

When drilling near the highwall, the operator can position his tracks parallel to the wall at a safe distance from falling rocks.

When tramming downhill or uphill the machine can be turned 180° so that the operator has excellent visibility.

Carousel Rod Changer

Faster is Better

To improve your overall productivity, our new carousel rod changer significantly reduces rod change time. Additionally the carousel is supported by a sturdy feed and the extension boom allowing for large pattern coverage so fewer set ups are required.

Our carousel rod changer is light weight and holds more rods, allowing the boom extension to reach further and drill deeper while maintaining stability. The feed and carousel rod changer can accommodate multiple lengths and diameters of drill steel.

Additional Features

- 45 mm drill steel diameter
- Drill steel lengths 3.66 m or 4.27 m (12 or 14 ft) with a 6.1 m (20 ft) starter rod
- Six pot carousel
- Deep multi-pass hole depth to 31.1 m (102.5 ft)
- Unique gate design always keeps a rod in position; ready to load
- Heavy-duty, dual rod grippers assist with rod changes and are designed to last
- Precise positioning function indexes and locks, eliminating the need for troublesome switches and sensors that are failure prone due to the elements and vibration
- Corrosion resistant and self-lubricating pivot points eliminate manual lubrication

Boom and Feed
Extend Your Reach

Sturdy Boom and Feed Support the Carousel Rod Changer

- Larger pattern coverage with fewer set ups
- Sturdy telescopic boom on both models 3.04 m (10 ft)
- Heavy-duty boom is constructed of thick square tubing with steel plate reinforcements in key areas to add strength
- MD5050 boom extension adds 0.6 m (2 ft)
- MD5050 T boom extension adds 1.2 m (4 ft)
- The boom swing capability of the MD5050 is 14° L to 19° R
- Manual pendulum inclinator
- Optional knuckle boom 5.9 m (19.25 ft)
- Feed table is 2.7 m (9 ft) with a 0.9 m (3 ft) extension
- Feed system resists torsion and thrust loads due to high strength steel channels with diagonal internal bracing
- Chain force is 3347 kg (7,379 lb)
- Planetary gearbox feed drive is capable of 3347 kg (7,379 lb) feed force and 36.9 m/min (121 ft/min) speed
- Lighting on the feed illuminates the carousel and hole site for around the clock drilling

Power Group
Performance Driven

Compressor
Strong flushing power
- Direct driven by a poly chain (belt) from gearbox
- High pressure rating 7 m³/min (250 ft³/min) @ 9.6 bar @ 150 psi
- Reliable rotary screw-type compressor
- Receiver-separator combination tank

Cooler
ATAAC side by side arrangement
- 52° C (125° F) ambient temperature
- Easy troubleshooting and cleaning of the coils
- 76 cm (30 in) large fan assembly

The MD5050/MD5050 T power group delivers fast cycle times and maximum efficiency due to the combination of air capacity, horsepower and a cooler sized to keep all systems operating at optimal temperatures.

Engine
Tier 3 engine at 150 kW (203 hp) @ 2,100 rpm. The four (4) cylinder engine is electronically controlled, turbocharged, and water-cooled.

Additional Engine Features
- Automatic engine throttle control based on power demand
- Dual-element air filter
- Dual-fill 303 L (83 gal) fuel tank for 13 hours of fuel
- 28,000 series gearbox

Hydraulics
- Piston pump runs all functions in either mode – pressure compensated in drill mode and load sensing in tram mode
- In tram mode the compressor runs at minimum pressure valve setting
- Large hydraulic tank for greater cooling capacity for longer intervals between oil usage (379 L or 100 gal)

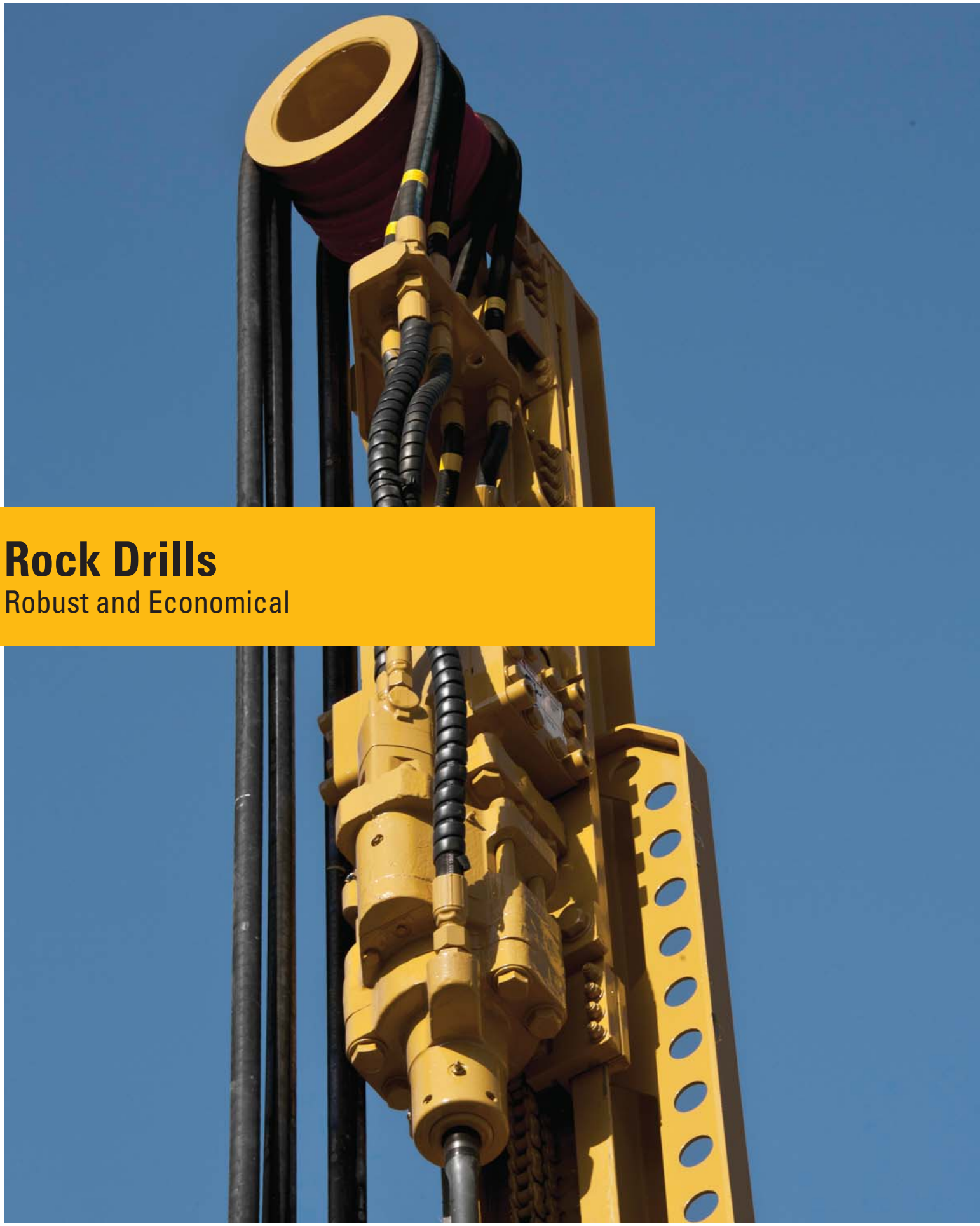

Rock Drills

Robust and Economical

Reliable Performer

Low cost of ownership and reliability are yours with renowned Cat Rock Drills. Building on a legacy of simplistic power, these drills have long life expectancy and are field serviceable.

This combination of robust design and easy maintenance means more hours of reliable, low-cost operation. For added efficiency, the pistons are matched to the cross section of the rod so the wave form is properly matched for maximum energy transfer.

Durable Design

A simple design coupled with high strength materials yields exceptional durability.

- Having only half of the components of competitive models, there are fewer internal parts to wear
- There are four major housings bolted together with high strength flanges eliminating troublesome long tie rods
- Long life alloy bushings
- Fast response accumulators provide a smooth and efficient hydraulic oscillation
- Long leakage paths of the oscillator bearings yield high volumetric efficiency

Owner Serviceable

Cat Rock Drills are so simple that owner serviceability is a viable alternative and cost savings.

- Other models require downtime for round trip transportation to a clean room environment
- Only their OEM service technicians can perform the maintenance and repairs
- All maintenance and rebuilds can be done in your shop and some maintenance can even be done with the rock drill still mounted to the feed
- Accumulator assemblies may be replaced in the field
- Troubleshooting is easy since there are half the components of other drills

Automated Rock Drill Lube System – Optional

Peak performance is sustained when your rock drill is kept lubricated, cool, and automatically maintained with our new Auto Rock Drill Lube System. Operators no longer have to stop drilling to manually grease the rock drill every two hours.

- Saves more than forty hours a year over manual greasing
- Components reach full life expectancy at proper lube intervals
- Grease reservoir stores supply for up to five 8-10 hour shifts
- A timer board cycles the grease pump throughout the day eliminating maintenance time
- High and low pressure conditions are continually monitored

MD5050/MD5050 T is equipped with the HPR4519 hydraulic powered percussion rock drill rated at 19 kW (25 hp) output energy with dual hydraulic variable rotation motors producing 908 N·m (670 lbf-ft) torque.

Cab

To keep operators comfortable, the MD5050/MD5050 T cab is pressurized with sound levels less than 80 dB(A), responsive controls minimize fatigue and it's isolator mounted to minimize vibration. Safety features include ROPS/FOPS certification, numerous shutdown methods, and front window egress, providing a second exit in case of emergency.

Features

- Climate control system maintains a consistent temperature
- Air is filtered to the operator
- Sound levels are less than 80 dB(A)
- Defrost/defog air is supplied to windows
- Operators seat is adjustable six ways
- Armrests, controls and switches are ergonomic
- Easy access to cab air filter
- AM/FM Radio IPOD/MP3 player ready
- Communications radio ready
- Easy to clean finishes
- External 12V plug
- High visibility with 3.07 m^2 (33 ft^2) tinted safety glass windows
- Slim structure members minimize visual obscurity
- Skylight provides excellent visibility of the drill string
- Mirrors assist in moving the machine
- Ground level shutdowns
- Heavy duty handles
- Fire extinguishers
- Three speed window wipers
- Dual joystick controls are ergonomic and seat-mounted
- For heightened precision, the position and shape of the joysticks match the operator's natural expectations
- Thread lube system is operated from within the cab

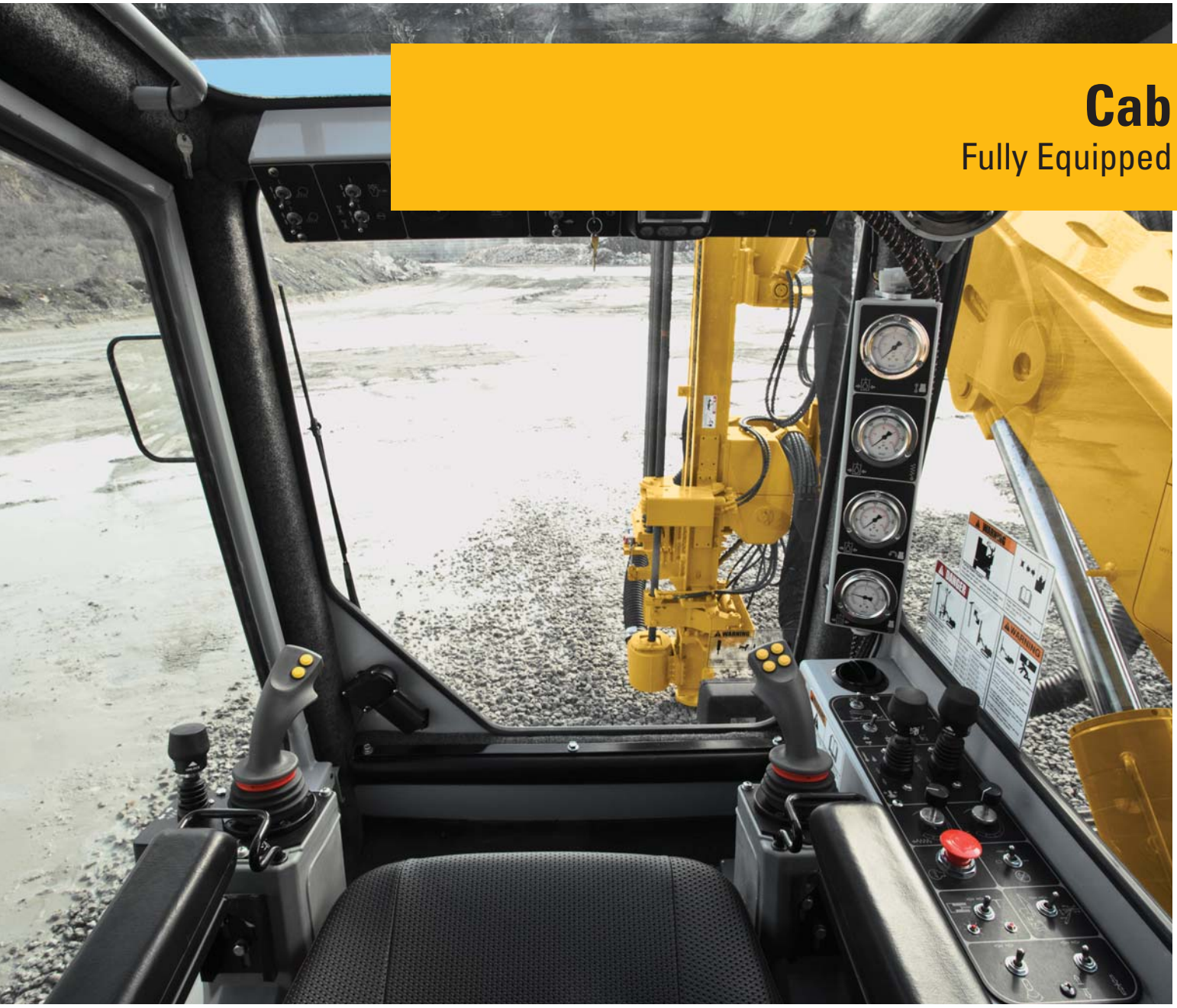

Cab
Fully Equipped

Smart Drill Monitoring System

Developed to assist novice drillers, the Smart Drill system increases your overall drill production in difficult drilling conditions. It's a hydraulically operated drilling control system that monitors changes in rock formation and adjusts the impact and feed pressure to the hardness of the rock. It incorporates anti-jam, anti-plunge, and anti-plug and increases overall life of drill string.

Dust Collection

Contain It – Quickly and Quietly

Powered to clean holes up to 102 mm (4 in), the MD5050/MD5050 T dry dust collection system is efficient. The heavy-duty system effectively manages rock fragments.

Features

- Dust Collector is mounted within the slim profile of the machine
- The sealed pick up pot prevents cuttings from escaping above the hole
- Swing out design for interior access
- Optional water injection system can be used to suppress dust and create hole-collaring for a natural seal
- The suction fan design limits the power requirement
- Easy bottom access to filters and air valves
- Vacuum generated air flow carries the materials
- Separator is feed mounted and parts cuttings from dust
- Abrasive resistant dust hose is 127 mm (5 in)
- Filtration area is 30.6 m^2 (330 ft^2) and separates the solid particles from the clean air
- Timed cleaning is continual through reverse-pulses of air

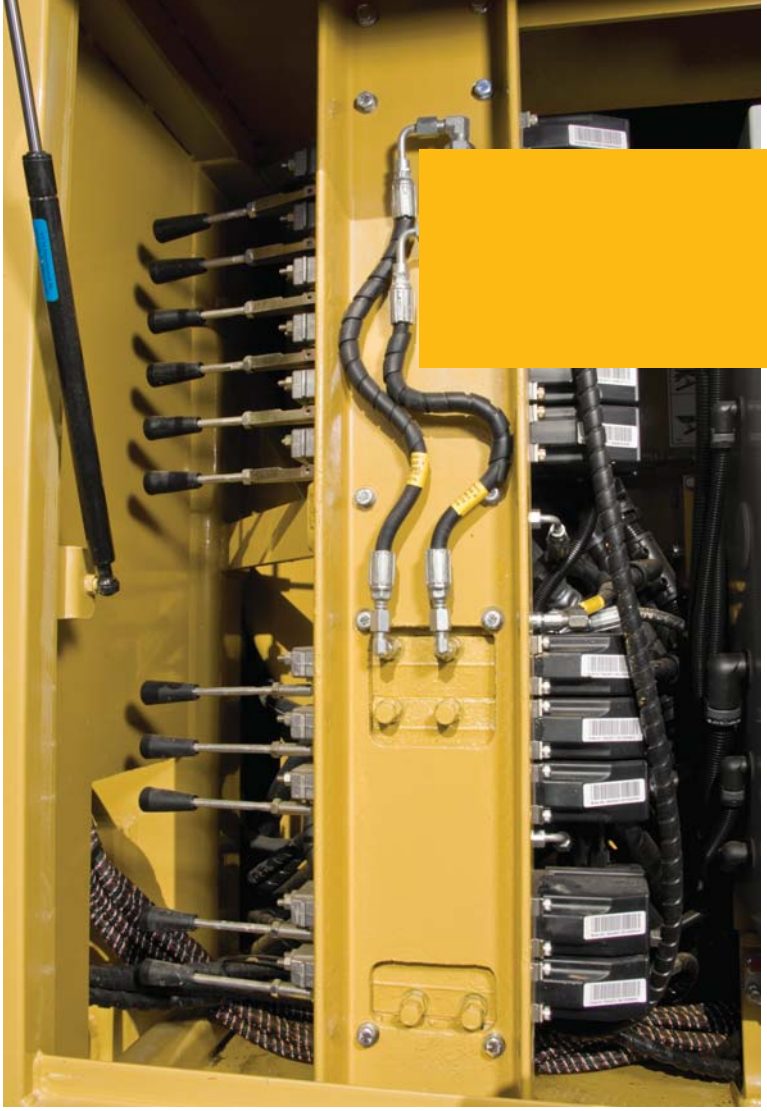

Safety
Designed with Protection

To provide a safe working environment for your operators and service technicians, the MD5050/MD5050 T is equipped with numerous safety features.

Track Drill Safety Features
- Non-slip, heavy duty steps and handles are strategically placed
- Three points of contact at all steps
- Ground-level access to service points and well organized electrical and hydraulic designs so no step ladder required
- Feed mounted swipe string
- Fire extinguishers

Cab Safety Features
- ROPS/FOPS cab
- High visibility with 3.8 m^2 (41.76 ft^2) of tinted safety glass
- Slim structure members minimize visual obscurity
- Skylight allows viewing the top of the feed
- Mirrors assist in safely moving the machine
- Ground level shutdowns
- Heavy duty handles
- Three speed window wipers

Operator Training
- High quality manuals for operation, maintenance, and service
- Classroom style training available
- Hands-on training with your local Cat dealer

Serviceability
Keep Running

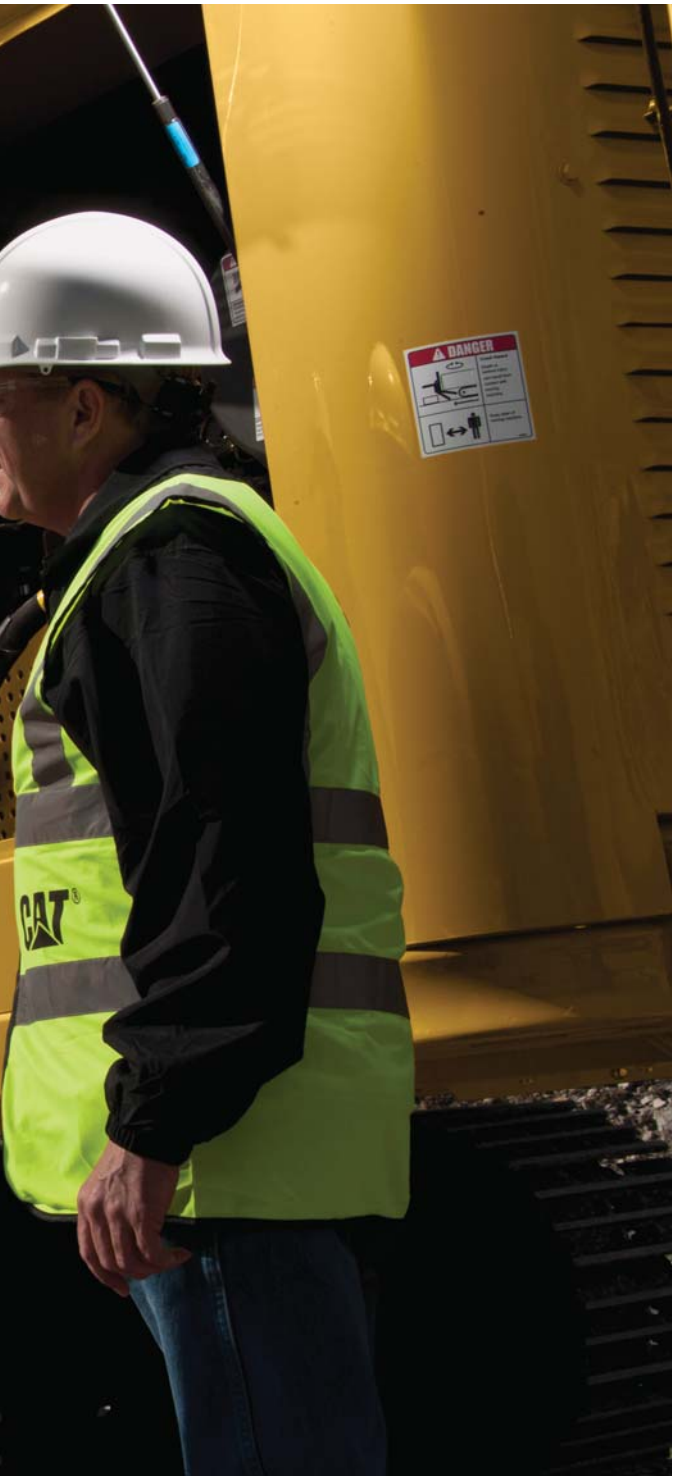

Serviceability

With the maintenance friendly designs, service access is safe and efficient. Cat Track Drills have well organized electrical and hydraulic arrangements. Logically located components contribute to its simplicity and ease of maintenance. You will benefit with longer equipment life cycle, lower operating costs, and higher re-sale value.

Features

- The grease reservoir is easily accessible for changing coupling grease
- Enclosure has doors lifted with gas springs
- Two exterior rear facing lights
- The canopy can be completely removed via four pinning points and lifting lugs
- Pump for filling hydraulic tank
- Service areas are designed with three points of contact for safety

Well Organized Electrical and Hydraulic Designs

- Manual valve bank for operating in the event of an electrical loss
- Color coded valves and blocks for easy identification and troubleshooting
- Point to point wiring reduces mean time to repair
- Bulk head fitting to allow for shorter run hoses
- Hydraulic hoses labeled by diameter and length and spaced for easy wrench access
- Portable interior halogen light for underneath the canopy

Supported by World-class Cat® Dealer Network

From helping you choose the right machine to keeping your equipment up and running, your Cat dealer provides the best in sales and service.

- Preventive maintenance programs are available to maximize your return on investment, achieve full equipment life cycle, and managing costs
- Guaranteed maintenance contracts help you forecast your businesses needs and strategically plan for service and parts expenses
- Best-in-class parts availability because Cat dealers understand the value of your uptime
- Operator training to help boost your productivity
- Genuine Cat Remanufactured Parts are available

Sustainability
Forward Thinking

While helping you increase the efficiency and productivity of your business, Cat Drill designs leverage technology and innovations that also help minimize the environmental impact of mining. We strive to provide products, services and solutions that use our natural resources wisely.

MD5050/MD5050 T Sustainability Features

- Fuel economy is achieved with three speed throttle control
- Smart Drill hydraulically operated drilling control system automatically adjusts power to the rock condition requirements
- Auto lube systems are clean and efficient
- Remanufactured components are available
- Major components can be rebuilt

General Data

Hole diameter range	63.5 mm-102 mm	2.5 in-4.0 in
Hole depth maximum	31 m	102.5 ft
Engine	Tier 3, 4 cylinder inline turbocharged, water-cooled, direct injection, 150 kW (203 hp) at 2,100 rpm	
Compressor	7 m^3/min @ 10.2 bar	250 ft^3/min @ 150 psi
Rock drill HPR4519	19 kW	25 hp

Weights

MD5050 Shipping weight (base machine)	12 700 kg	28,000 lb
MD5050 T Shipping weight	15 512 kg	34,200 lb

Undercarriage

Hydraulic motor-driven track assemblies with towing disconnects.		
MD5050		
B-3 Excavator		
Spring applied disc brakes		
Triple rock grousers		
Wide triple grouser pads	300 mm	11.8 in
Gradeability	35°	
Ground clearance	380 mm	15 in
Ground pressure	0.82 bar	12 psi
Track gauge	198 cm	78 in
Tram maximum speed	4 km/h	2.6 mph
Track oscillation	± 10 deg	
MD5050 T – 360° pattern coverage		
Cat 312 Excavator with 315 slew		
Spring applied disc brakes		
Triple rock grousers		
Wide triple grouser pads	500 mm	19.68 in
Gradeability	35°	
Ground clearance	434.5 mm	17 in
Ground pressure	0.5 bar	7.5 psi
Track gauge	200 cm	90 in
Tram maximum speed	4 km/h	2.6 mph
Track oscillation	± 0 deg	

Power Train

Tier 3, 4 cylinder inline turbocharged, water-cooled, direct injection	150 kW at 2,100 rpm	203 hp at 2,100 rpm
28,000 Series gearbox		
Ambient temperature capability	52° C	125° F
Altitude before derating	2286 m	7,500 ft
Dual element air filter		
Fuel tank – dual fill	303 L	80 gal

Cooler Package

Cooler package	7 m^3/min	250 ft^3/min
AKG four vertical sections; compressor, engine, hydraulic and air after cooler		
Sized for ambient capability of 52° C (125° F)		
Fan drive with temperature compensated speed control		
Fan assembly	76 cm	30 in

Hydraulic System

Pressure compensated, load sensing piston pump		
Hydraulic test ports		
Smart Drill drilling control system		
Pressure compensated axial piston pumps running at 2,340 rpm		
Convenient pressure gauges and test taps installed		
Full flow 5 micron filtration		
Fill pump	379 L	100 gal
Full flow cooling		

Air Compressor

Direct driven by poly chain (belt) from gearbox		
Screw type compressor		
Adjustable	118 L/sec @ 10.2 bar	250 ft^3/min @ 150 psi
Intake check valve and receiver-separator combination tank		
Dual filter elements		

Shutdown Features

Low engine-oil pressure
High compressor discharge temperature
High engine-water temperature
Feed-mounted emergency stop cable
Hydraulic test ports for troubleshooting

Dust Collecting System

Dust collector sized to clean holes up to 101.6 mm (4 in) in diameter		
Hydraulic motor powered, dry dust collecting system		
Filter area	30.6 m^2	330 ft^2
Pneumatic filter purge system		
Abrasive resistant suction hose	152.4 mm	6 in
Reverse pulse filter cleaning system		
Bottom change filter elements quantity		
Feed-mounted dual axis precleaner		
Hydraulically operated and positional dust pickup pot		

MD5050/MD5050 T Track Drill Specifications

Cab

ROPS/FOPS certified		
Digital engine and drill readout system		
Joysticks in both arm rests		
Noise rating	less than 80 dB(A)	
Total glass	3.07 m^2	33 ft^2
Tinted sliding windows		
Reversing camera		
Heater/AC pressurizer and coils mounted in cab		
Front washer and wiper		
AM/FM radio		
Auxiliary input		
CB Radio (optional)		
12V plug		
Six way adjustable seat; forward/back, up/down and reclining		
Emergency egress		

Smart Drill Drilling System

Operator-selected, smooth, electrical control system for all drilling functions
Monitors main hydraulic system (hammer, feed, air and rotation pressure) and automatically adjusts to pre-programmed parameters
Minimizes overfeeding
Anti-plug
Anti-plunge
Anti-jam

Boom System

Boom length	3.04 m	10 ft
Boom extension		
MD5050 – inner boom extension	0.6 m	2 ft
MD5050 T – inner boom extension	1.2 m	4 ft
Boom swing		
MD5050	14° L to 19° R	
MD5050 T	360°	
Boom lift above horizontal	36°	
Boom dump below horizontal	29°	

Feed System

Model UFH16 hydraulic motor driven steel channel feed		
Power centralizer		
Manual inclinator		
Will accept 6.1 m (20 ft) starter steel		
Set up for 45 mm drill steel		
Feed extension	0.91 m	3 ft
Feed swing	36° L to 37° R	
Dump	139° from 0° of boom	
Feed channel		7 in
Feed rate		91 ft/min
Chain force	3347 kg	7,379 lb
Replaceable wear pads with adjusters		
Drill steel thread lubrication		

Carousel Rod Changer System

3.66 m (12 ft) Rod Changer
45 mm – 6 Rod +1 or 51 mm – 6 Rod +1
Total hole depth 27.4 m (90 ft) with 6.1 m (20 ft) starter steel
4.27 m (14 ft) Rod Changer
45 mm – 6 Rod +1 or 51 mm – 6 Rod +1
Total hole depth 31 m (102 ft) with 6.1 m (20 ft) starter steel

Rock Drill

HPR4519 hydraulic powered percussion rock drill		
Output energy @ 240 rpm	19 kW	25 hp
Dual hydraulic variable rotation motors producing 908 N·m (670 lbf-ft) torque		
Weight	299 kg	660 lb
Rod diameter	45 mm	
Percussion pressure	Up to 200 bar	Up to 2,900 psi
Blow rate	2500-2700 bpm	
Rock drill auto lube system option		
Optional HPR5123 Rock Drill		
Output energy @ 160 rpm	23 kW	31 hp
Dual hydraulic variable rotation motors producing 1356 N·m (1,000 lbf-ft)		
Weight	397 kg	877 lb
Rod diameter choices	45 or 51 mm	
Percussion pressure	Up to 200 bar	Up to 2,900 psi
Blow rate	2500-2700 bpm	

Safety

Feed swipe rope engine shut off
Standard cabs have front window push-out for emergency egress
Emergency stop in the cab and on the feed
Shutoff pedal in the cab
All proper guards in place
Spring-applied, hydraulically released brakes
Ground-level access to service points and well organized electrical and hydraulic designs
Heavy duty steps and handles are strategically placed and non-slip
Three points of contact at all steps

MD5050/MD5050 T Track Drill Specifications

Dimensions

All dimensions are approximate.

MD5050

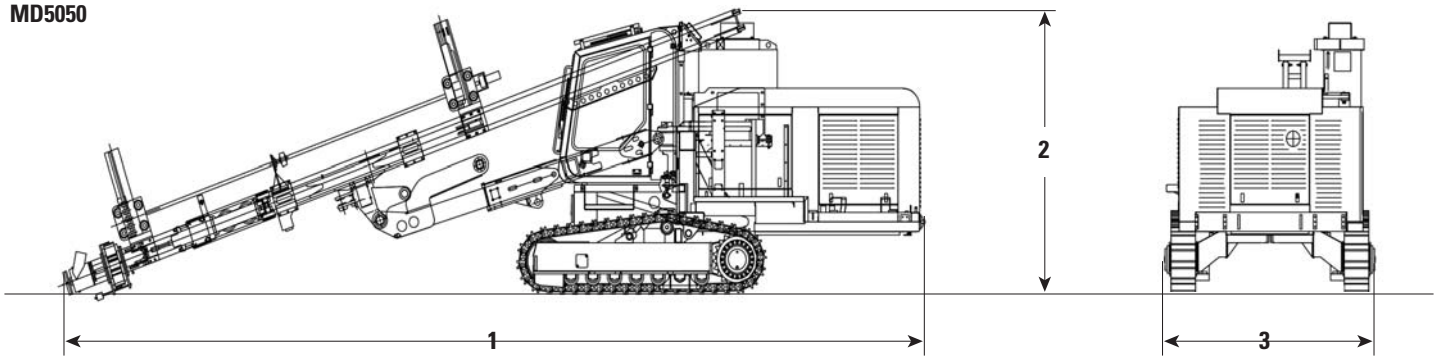

MD5050 T

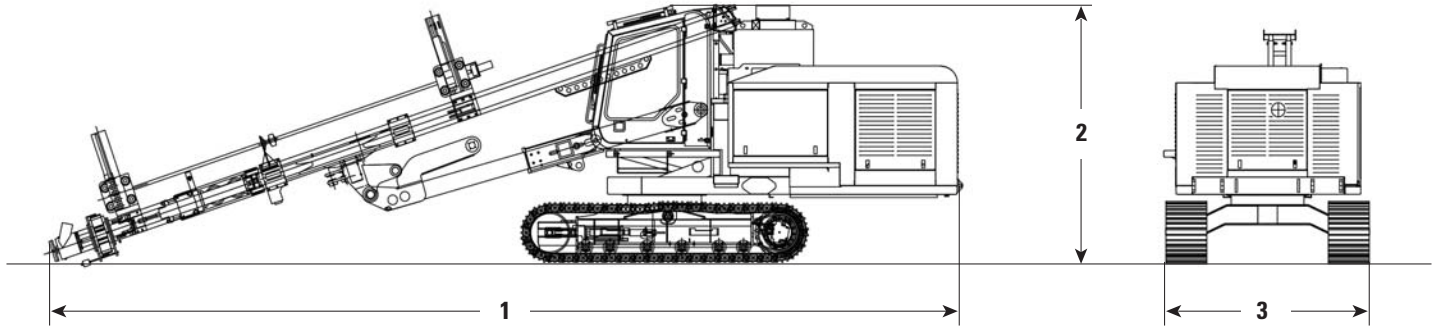

	MD5050		MD5050 T	
1 Shipping Length	10.7 m	35 ft	11.4 m	37.3 ft
2 Shipping Height	3.2 m	10.5 ft	3.5 m	11.5 ft
3 Shipping Width	2.6 m	8.5 ft	2.7 m	8.7 ft

MD5050 Standard Equipment

Standard equipment may vary. Consult your Cat dealer for details.

TRACK UNDERCARRIAGE
- Hydraulic, motor driven, track assemblies with 300 mm (11.81 in) grousers, hydraulic cylinder controlled oscillation, hydraulic released, spring applied, disc brakes, double rock grouser.

POWER
- Tier 3, 4 cylinder water-cooled, turbocharged, direct injection diesel engine rated at 150 kW (203 hp) @ 2,100 rpm.
- 303 L (80 gal) fuel tank.

HYDRAULIC SYSTEM
- Pressure compensated, load sensing piston pump.
- Hydraulic test ports.
- Smart Drill drilling control system.

COMPRESSOR
- Direct driven by a poly chain (belt) from gearbox.
- Screw type compressor 118 L/sec @ 10.2 bar (250 ft^3/min @ 150 psi); adjustable with intake check valve and receiver-separator combination tank.

COOLER
- ATAAC side by side arrangement
- 52° C (125° F) ambient temperature
- 76 cm (30 in) large fan assembly

BOOM SYSTEM
- 3.04 m (10 ft) sturdy telescopic boom with 0.61 m (2 ft) extension.
- 0.91 m (3 ft) feed extension; complete with drill positioner and universal feed table.

FEED SYSTEM
- Model UFH16 hydraulic motor driven steel channel feed.
- Includes power centralizer and manual inclinator.
- Will accept 6.1 m (20 ft) starter steel.

ROCK DRILL
- Model HPR4519 hydraulic powered percussion drill with an energy/frequency combination that covers a wide range of applications.
- Hydraulic motor powered variable speed rotation.

CAB
- Certified ROPS/FOPS pressurized, fixed cab complete with heater, air-conditioner, wipers, drilling lights, two axis angle indicator, and all necessary drilling controls.
- Smart Drill drilling system is an integral part of the hydraulics.
- AM/FM stereo, CD player and seat belt.

ROD CHANGER
- Unique carousel rod changer designed for 4.26 m (14 ft) drill steel.
- Carousel will hold six rods.
- With one rod in the feed the total drill string length is 31.7 m (104 ft).
- 45 mm drill steel is standard.

DUST COLLECTING SYSTEM
- Multiple element, hydraulic motor powered, dry dust collecting system; complete with feed mounted precleaner and power pick up pot.

OTHER STANDARD FEATURES
- Power coupling greaser, drill lights, complete lockable enclosure, magnetic work light, lifting eyes, and tool box.

MD5050 T Standard Equipment – same as MD5050 except for:

Standard equipment may vary. Consult your Cat dealer for details.

TRACK UNDERCARRIAGE
- Cat 312 equipped with a 315 slew arrangement for maximum control and positioning.
- Hydraulic, motor-driven with 500 mm (19.68 in) grousers, hydraulic released, spring applied, disc brakes, triple rock grouser.
- The substructure is capable of 360° rotation for optimum pattern coverage.

BOOM SYSTEM
- 3.04 m (10 ft) sturdy telescopic boom with 1.2 m (4 ft) extension.
- 0.91 m (3 ft) feed extension; complete with drill positioner and universal feed table.

OTHER STANDARD FEATURES
- Multiple element, hydraulic motor powered, dry dust collecting system; complete with feed mounted precleaner and power pick up pot.

MD5050/MD5050 T Optional Equipment

Optional Equipment

Optional equipment may vary. Consult your Cat dealer for details.

- HPR5123 Rock Drill in lieu of HPR4519
- Rod changer conversion kit
- CE kit
- Single bar grousers
- Toe hole capabilities
- Auto lube for rock drill
- Arctic oil
- Cold weather package
- Remote tram
- Rear-mounted water injection system utilizing a 113 L (30 gal) pressure tank
- Additional 113 L (30 gal) water tank
- Carousel rod changer designed for 3.66 m (12 ft) drill steel. Carousel will hold six rods.
- Special paint
- Knuckle boom in lieu of extension boom (MD5050 T only)

Notes

For more complete information on Cat products, dealer services, and industry solutions, visit us on the web at **www.cat.com**

AEHQ6898 (12-2012)

© 2012 Caterpillar Inc.
All rights reserved

Materials and specifications are subject to change without notice. Featured machines in photos may include additional equipment. See your Cat dealer for available options.

CAT, CATERPILLAR, SAFETY.CAT.COM, their respective logos, "Caterpillar Yellow" and the "Power Edge" trade dress, as well as corporate and product identity used herein, are trademarks of Caterpillar and may not be used without permission.

CAT®